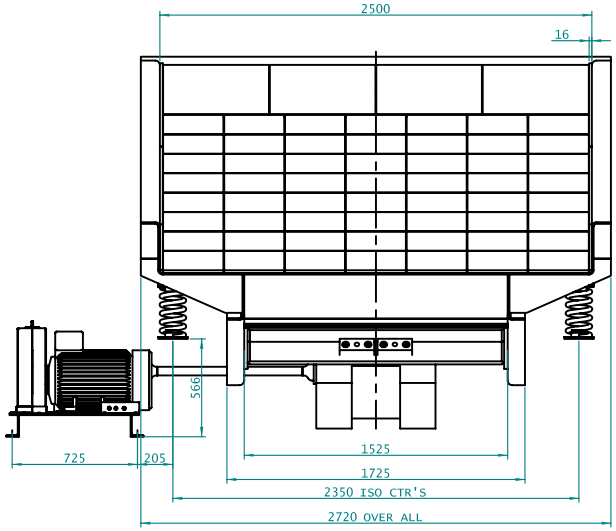

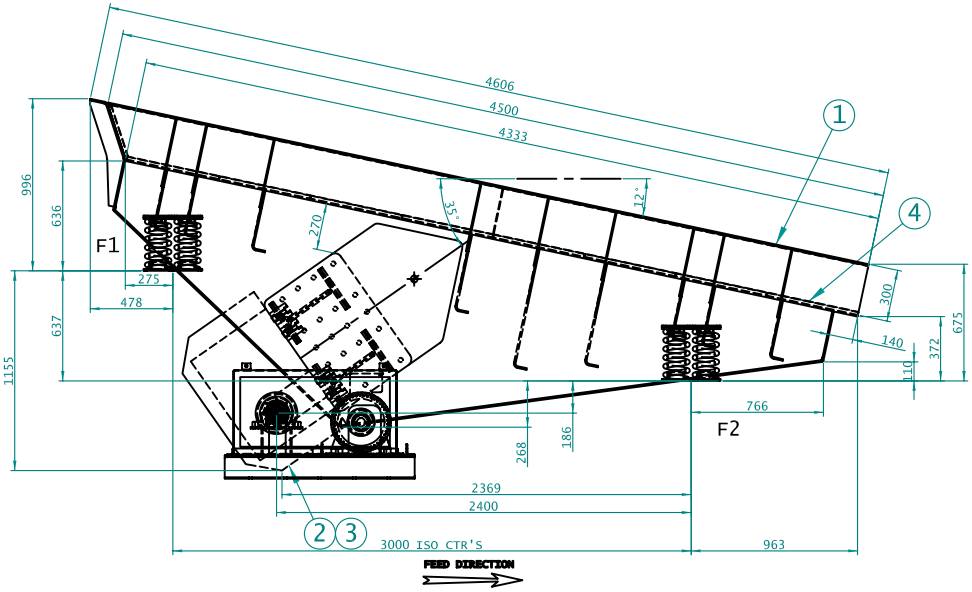

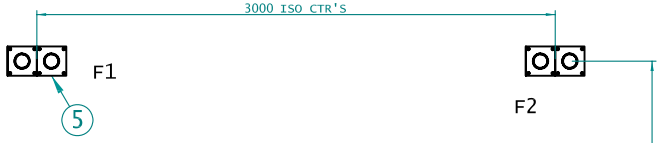

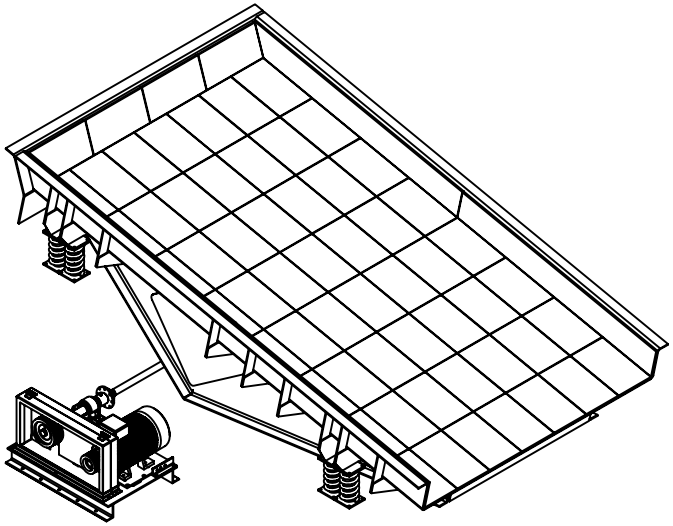

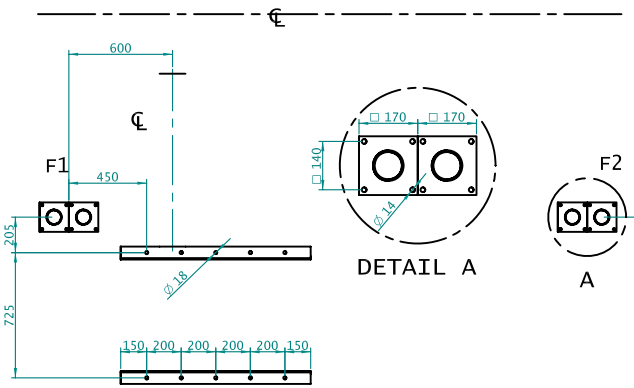

DATE	PROJECT	CUSTOMER

ITEM	REQ'D	DESCRIPTION
6	1	18.5 kW MOTORBASE C/W 4 POLE TEFC MOTOR
5	8	Ø26x128x320 COIL SPRINGS
4	1 SET	LINERS VRN 500 16 TH FLOOR AND SIDES
3	1 SET	EXCITER BLOTS C/W NUTS & BOLTS
2	1	JR 408 EXCITER
1	1	FEEDER BODY

EQUIPMENT LIST

GENERAL ARRANGEMENT
FRF 2500-300 X 4500
1 X JR 408 EXCITER

INFORMATION ONLY

REFERENCE	DRAWING NUMBER	DESCRIPTION

Considering the natural frequency of the supporting structure, the vibrations caused by dynamic loads can be determined.

It is not sufficient to base the calculation of supporting structure, platforms and foundaton on static loads only.

Select permissible vibration data in accordance with DIN 4150 (PROVISIONAL).

JOEST is not responsible for any vibrations, neither mechanical nor air, transmitted to other equipment and structure.

SUPPORTING POINTS

F1 F2 F1 F2

FEED DIRECTION

MINIMUM DISTANCE TO STATIONARY PARTS 80MM

TRAVERSE TO CONVEYING DIRECTION MINIMUM 50MM

OPERATING FREQUENCY ±13.9 Hz

OPERATING LOADS PER ISOLATION POINT EXCLUDING MATERIAL LOAD

		STAT (N)	DYN (N)
F1	VERT	15740 N	±2150 N
	HORIZ		±1850 N
F2	VERT	13770 N	±2150 N
	HORIZ		±1850 N

DRN R. OLIVIER
DATE 11/12/2008
CHECKED
APPROVED
PROJN
SCALE 1:15
SHEET SIZE A1
SHEET 1 OF 1

JOEST (PTY) LIMITED
Reg No 1970/001427
18 Belgrade Ave. Aeroport 1620
Tel: +27 11 923 9000
P.O. Box 3989 Kempton Park 1620
Fax: +27 11 923 9001

SAF 4300-81 REV A

DRAWING CREATED USING SOLID EDGE